the HOSPO group

EXPERIENCES

LOOKING FOR SOMETHING SPECIAL?

The Hospo Group offers a range of exciting experiences available for groups across all venues.

You'll receive a private masterclass from skilled bartenders and enjoy exclusive use of the venue for the class duration. Superb for birthdays, parties, corporate networking and team building.

WILD PONY SALOON · CABANA BAR · THREE WOLVES · Flamingos TIKI BAR

THE FOX SMALL BAR · WOLF LANE DISTILLERY · THE HOUND

COCKTAIL MASTERCLASSES

Unleash your inner mixologist in our Cocktail Masterclass, where good times and great drinks go hand in hand! You'll learn to craft crowd-pleasing cocktails with flair, flavour and a whole lot of fun.

Class Length: 2 – 3hrs

Start Time: Classes start between 12pm and 2pm. Times vary based on venue.

Minimum Attendees: 10 people

Maximum Attendees: up to 25 people. Numbers vary based on venue.

Pricing:

- 2 cocktails each - $65pp
- 3 cocktails each - $75pp
- Feeling peckish? Add shared charcuterie - +$15pp
- High roller tastes? Upgrade to premium spirits - +$20pp

Choose your own adventure....

Please note T&Cs apply.

CLASSICS MASTERCLASS

Step back in time and learn the secrets behind the world's most iconic cocktails in our Classics Masterclass! Stir, shake and sip your way through these popular recipes with a modern twist.

Cocktail Options:

- Cosmopolitan
- Martini
- Old Fashioned
- Negroni
- Whisky Sour
- Espresso Martini

MARGARITA MASTERCLASS

Shake things up and master the art of the perfect Margarita in this hands-on, salt-rimmed adventure! From classic recipes to creative twists, you'll be sipping like a pro in no time.

Cocktail Options:

- Classic
- Tommy's
- Spicy
- Coconut
- Passionfruit
- Mango

TROPICAL MASTERCLASS

Dive into paradise with our Tropical Masterclass, where every shake brings you closer to island bliss! Learn to mix, muddle and garnish your way through exotic flavours and sunny vibes.

Cocktail Options:

- Pina Colada
- Mojito
- Mai Tai
- Daiquiri
- Tequila Sunrise
- Blue Hawaii

Please note T&Cs apply.

GIN BLENDING MASTERCLASS

Become the alchemist of your own gin in our Gin Blending Masterclass, where botanicals, creativity and a splash of mischief collide! Explore flavour profiles, mix your perfect blend, and walk away with a gin that's uniquely you.

Starting with a gin masterclass, you will taste a selection of Wolf Lane Distillery award winning gins, each paired with tonic or soda. You'll learn the core botanicals and building blocks of a delicious gin recipe, before experimenting to create your very own bespoke gin blend. Our bending graduates take home a 200ml bottle of their gin.

Class Length: 2 – 3hrs

Start Time: 12pm or 2pm. Times vary based on venue.

Minimum Attendees: 10 people

Maximum Attendees: up to 25 people. Numbers vary based on venue.

Pricing:

- $95pp
- Feeling peckish? Add shared charcuterie - +$15pp
- Upgrade to a 500ml bottle - +$40pp
- Upgrade to a 700ml bottle - +$60pp

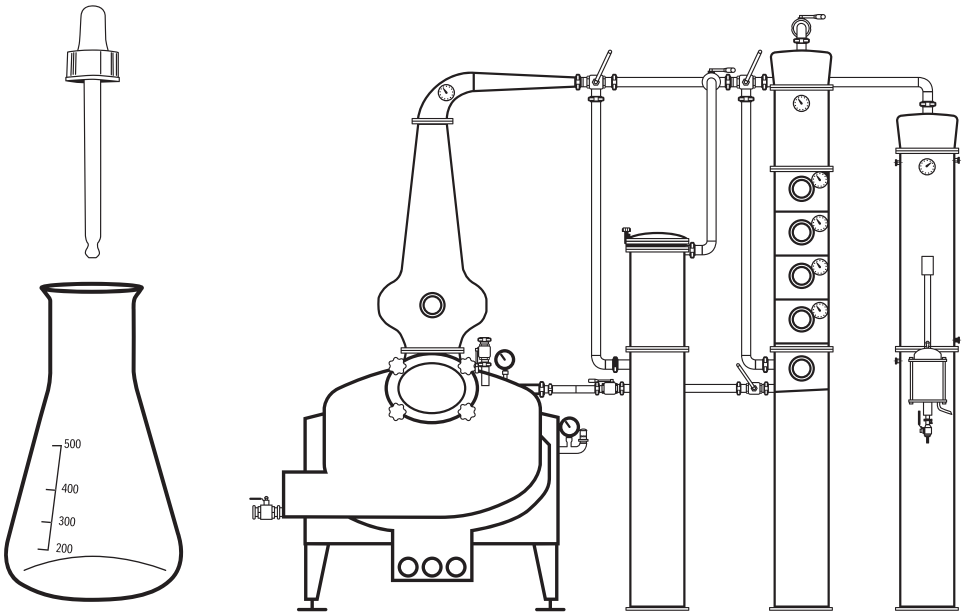

The Hospo Group EXPERIENCES

Please note T&Cs apply.

TASTING MASTERCLASSES

Sip back and relax! Our Tasting Masterclasses will take you on a journey of discovery through the history of the spirit, distillation process, and guide you through the dynamic flavour profiles as you enjoy them.

Class Length: 2hrs

Start Time: 1pm or 2pm. Time varies based on venue.

Minimum Attendees: 10 people

Maximum Attendees: up to 25 people. Numbers vary based on venue.

WHISKY MASTERCLASS

Life's a barrel, full of whisky! For all the whisky lovers out there, this class is a must.

Pricing:

- 3x Whiskies (15mL pours) - $60pp
- Feeling peckish? Add shared charcuterie - +$15pp
- High roller tastes? Upgrade your whisky:
  - Tier 2 - +$30pp
  - Tier 3 - +$70pp

TEQUILA MASTERCLASS

When life gives you lemons, grab tequila! Hola tequila lovers, this class is for you.

Pricing:

- 3x Tequilas (15mL pours) - $60pp
- Feeling peckish? Add shared charcuterie - +$15pp
- High roller tastes? Upgrade your tequila:
  - Tier 2 - +$30pp
  - Tier 3 - +$60pp

Please note T&Cs apply.